MICRO SWITCH
FREEPORT, ILLINOIS, U S A
A DIVISION OF HONEYWELL
FED. MFG. CODE 91929

SWITCH – TOGGLE

CATALOG LISTING
11TL1 SERIES
CHART 1

THIS DRAWING COVERS A PROPRIETARY ITEM AND IS THE PROPERTY OF MICRO SWITCH, A DIVISION OF HONEYWELL. THIS DRAWING IS NOT TO BE COPIED OR USED WITHOUT THE APPROVAL OF MICRO SWITCH.

MS NUMBER	CATALOG LISTING	CIRCUIT MADE WITH TOGGLE LEVER IN (5) KEYWAY SIDE (1-2)	CENTER (1-2)	OPPOSITE KEYWAY (2-3)	MILITARY RATING (AMPS) RESISTIVE LOAD DC VOLTS 28	125	250	AC VOLTS 125	250	LAMP LOAD 28 VDC	125 VAC	INDUCTIVE LOAD 28 VDC	125 VAC
MS27734-21	11TL1-1	ON	OFF	ON	20	.75	.5	15	6	5	3	15	10
MS27734-22	11TL1-2	OFF	NONE	ON									
MS27734-23	11TL1-3	ON	NONE	ON									
MS27734-24	11TL1-21	NONE	OFF	ON									
MS27734-33	11TL1-31	NONE	ON	ON									
					(REFER TO L191 FOR UL RATING)								
MS27734-29	11TL1-4	MOM OFF	NONE	ON	15	.75	.5	15	6	4	2	10	7
MS27734-31	11TL1-5	MOM ON	OFF	ON									
MS27734-30	11TL1-6	MOM ON	NONE	OFF									
MS27734-27	11TL1-7	MOM ON	OFF	MOM ON									
MS27734-26	11TL1-8	MOM ON	NONE	ON									
MS27734-32	11TL1-51	NONE	ON	MOM ON	(REFER TO L192 FOR UL RATING)								
MS27734-28	11TL1-61	MOM ON	OFF	NONE									

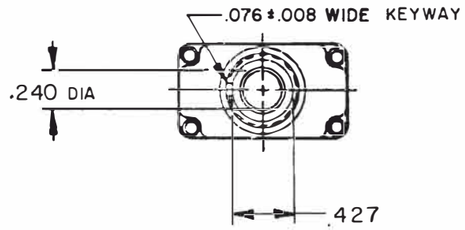

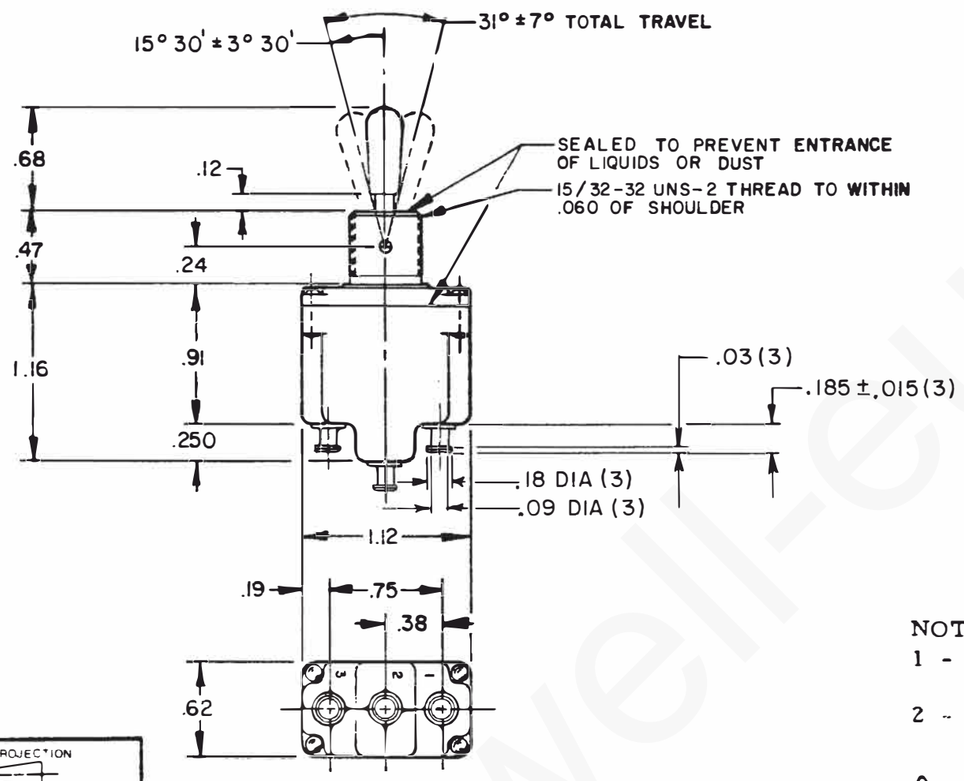

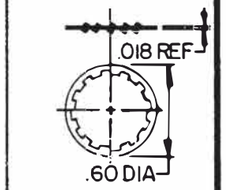

LOCKWASHER (3)

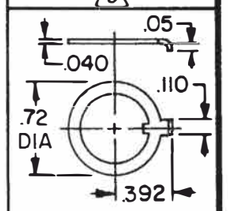

LOCKING RING (3)

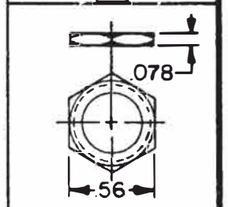

HEX NUT (2) (3)

NOTES
1 - SWITCHES ARE CAPABLE OF WITHSTANDING A TEMPERATURE OF 160°F CONTINUOUSLY AT FULL RATED LOAD
2 - CIRCUIT DESIGNATION, MICRO SWITCH CATALOG LISTING, DATE CODE, UL RATING AND MS NUMBER IDENTIFIED ON SIDE OF SWITCH
(3) FURNISHED UNASSEMBLED
4 - FOR TERMINAL COVER, SEE MICRO SWITCH CATALOG LISTING 5PA7
(5) APPLIES ONLY TO "ON" AND "MOMENTARY ON" POSITIONS
6 - THESE SWITCHES ARE QUALIFIED UNDER MIL-S-3950

THIRD ANGLE PROJECTION

SCALE FULL

DO NOT SCALE PRINT

TOLERANCES
APPLY TO DESIGN UNITS. CONVERSIONS ARE ONLY FOR REFERENCE UNLESS NOTED. TOLERANCES ARE ±

	DIM. mm	TOL. mm/in	DIM. in	TOL. mm/in
NO PLACES	X	1/.04		
ONE PLACE	X.X	0.4/.016	X.X	0.8/.03
TWO PLACES	X.XX	0.15/.006	X.XX	0.36/.016
THREE PLACES			X.XXX	0.13/.006
ANGLES				

DESIGN UNITS SI METRIC ☐ US CUSTOMARY ■

RAW MATERIAL-COMMERCIAL STANDARD
MICRO SWITCH STANDARDS APPLY
DIMENSIONS ARE TO BE MET BEFORE PROTECTIVE COATINGS ARE APPLIED

WEIGHT

15A-125,250 OR 277VAC
1/2HP-125VAC;1HP-250,277VAC
5A-125VAC "L" CODE L191

10A-125,250,277VAC
1/4HP-125VAC;1/2HP-250,277VAC
3A-125VAC "L" L192

CATALOG LISTING 11TL1 SERIES CHART 1
PAGE 1 OF 1
M
ISSUE 13
RELEASE NO. PR-1471
REPLACES

REVISIONS

A	PR5381	C J H 20 NOV 75
B	CO37951	J A L 7 DEC 76
C	CO-49070	E F 16 MAY 81
D	CO 49791	WJM 16 JUL 81
E	CO50496	J A P 16 NOV 81
F	CO 56057	MAM 28 SEPT 84
G	CO 56074	G J W 16 NOV 84
H	CO92297	JAK 13 FEB 98
J	CO-94427	CSL 24 NOV 99

DRAWN C J H 20 NOV 75
CHECK
CHECK
CHECK
CHECK
FORMTEK

nowell-europe.com